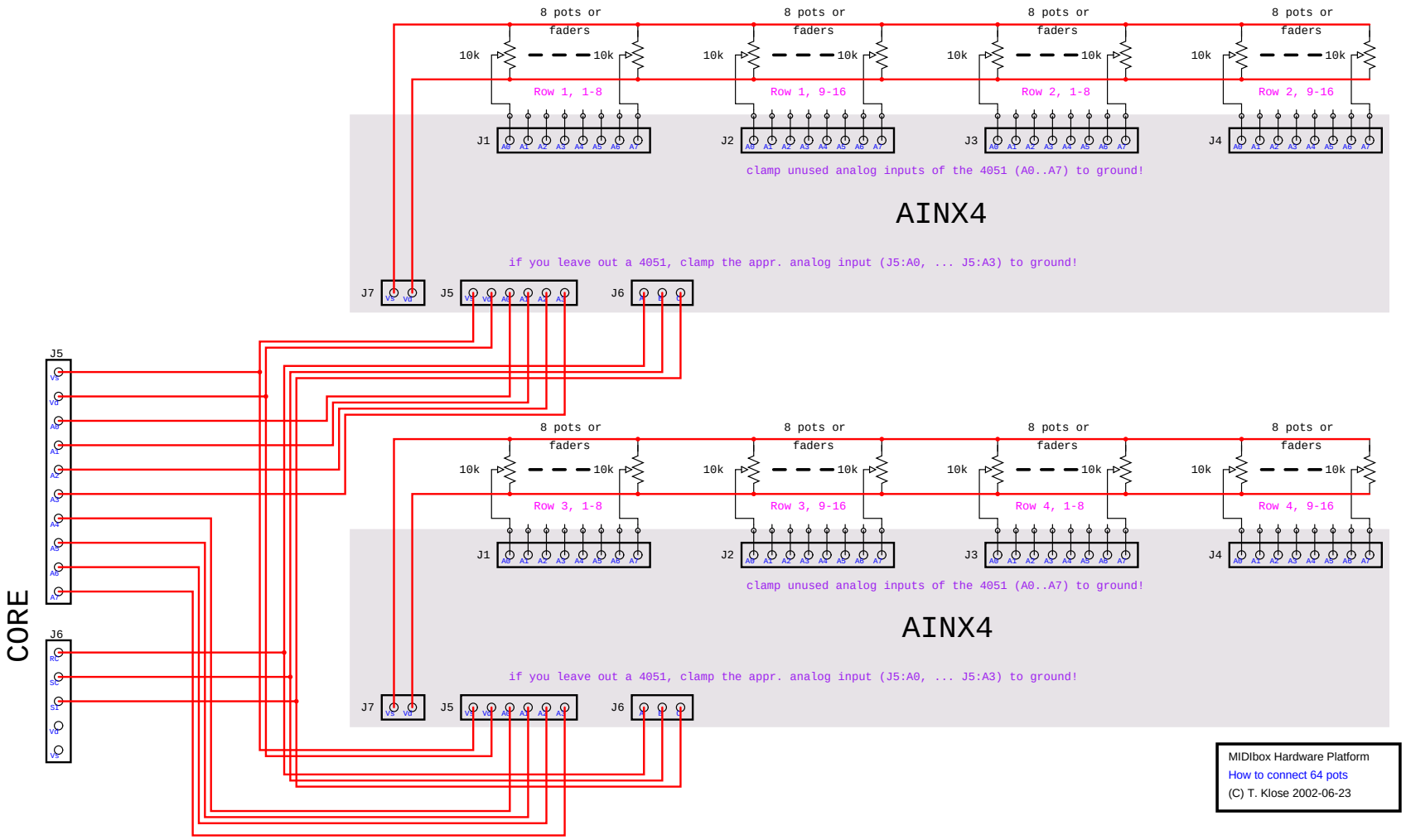
8 pots or faders
10k
Row 1, 1-8
Row 1, 9-16
Row 2, 1-8
Row 2, 9-16
Row 3, 1-8
Row 3, 9-16
Row 4, 1-8
Row 4, 9-16
J1
J2
J3
J4
clamp unused analog inputs of the 4051 (A0..A7) to ground!
AINX4
if you leave out a 4051, clamp the appr. analog input (J5:A0, ... J5:A3) to ground!
J5
J6
J7
CORE
MIDIbox Hardware Platform
How to connect 64 pots
(C) T. Klose 2002-06-23